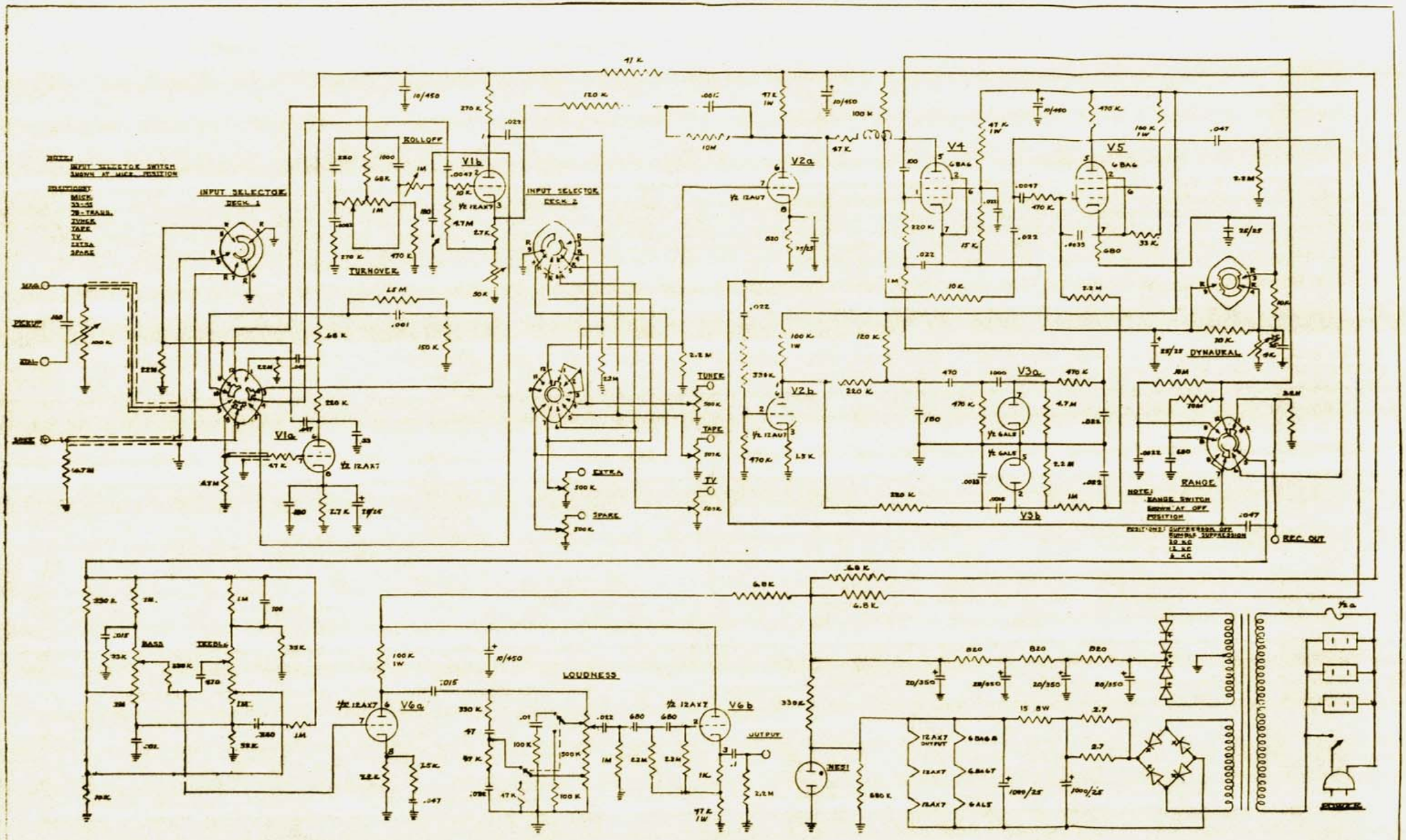

121 DYNAURAL EQUALIZER PREAMPLIFIER

CIRCUIT DIAGRAM

HERMON HOSMER SCOTT, INC. CAMBRIDGE, MASS., U.S.A.	
DR: S 530825	ENG. DWR
CH:	PROD.